# Rotary gripper modules EHMD

# Key features

## At a glance

- The rotary gripper module is a compact module for handling small parts.
- The rotary motion is generated by a stepper motor.
- The gripping motion is generated either electrically via a stepper motor or pneumatically via a cylinder.
- The gripper can grip in force mode when combined with the servo drive CMMT-ST. This enables flexible gripping.

Applications:
- Pick & place small parts from trays and tablets
- Fitting and removing cover caps on vials

- The servo drive CMMT-ST is a closed-loop and open-loop position controller
- Monitoring of freely defined positions and torque ranges
- Easy activation via:
  - I/O interface
  - IO-Link or I-Port
  - Modbus TCP
  - EtherCAT
  - PROFINET
  - EtherNet/IP

## Everything from a single source

Rotary module
EHMD
➔ page 5

Gripper jaw blanks
BUB-HGPT
➔ page 23

Servo drive
CMMT-ST
➔ page 24

## FCT software – Festo Configuration Tool

Software platform for electric drives from Festo (➔ www.festo.com/sp/fct)

- All drives in a system can be managed and saved in a common project
- Project and data management for all supported types of equipment
- Easy to use thanks to graphically supported parameter entry
- Universal mode of operation for all drives
- Work offline at your desk or online at the machine

# Key features

**The technology in detail**

Rotation

Closed-loop control

- Makes it possible to control the motor torque via the motor current, so the torque can be limited when screwing on a cover cap
- No step loss is possible in the event of overload
- It is possible to use the entire output torque of the motor

Open-loop control

- The motor is actuated in microstep operation with a constant, defined phase current
- Reduction of the holding current is required to prevent overheating
- A torque reserve is required to prevent step losses

Homing

- The encoder zero pulse can be used to home the axis of rotation
- One zero pulse per revolution
- Defined angular orientation based on this zero pulse

Gripping

Closed-loop control

- Makes it possible to control the motor torque via the motor current
- The gripping force of the gripper can be set by a limited driving torque of the lead screw

Open-loop control

- The motor is actuated in microstep operation with a constant, defined phase current
- Reduction of the holding current is required to prevent overheating
- The gripper drive is spring-mounted for force setting, so that defined gripping forces can be set in positioning mode

Homing

- Gripper motor has an incremental encoder. No limit switch is present
- In the opening direction, homing must be to a stop

**Combinations comprising mini slides EGSC-BS, EGSL and electric slide EGSK**

With mini slide EGSC-BS-25/32

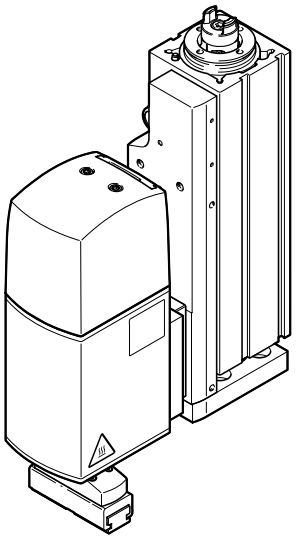

With mini slide EGSL-BS-35/45

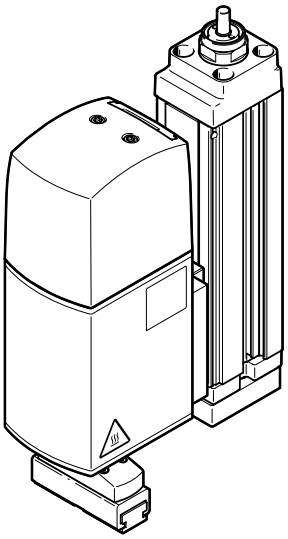

With electric slide EGSK-20/26

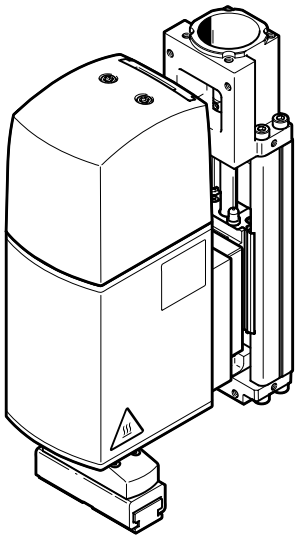

# Key features

**Application example**

Fitting and removing cover caps on vials

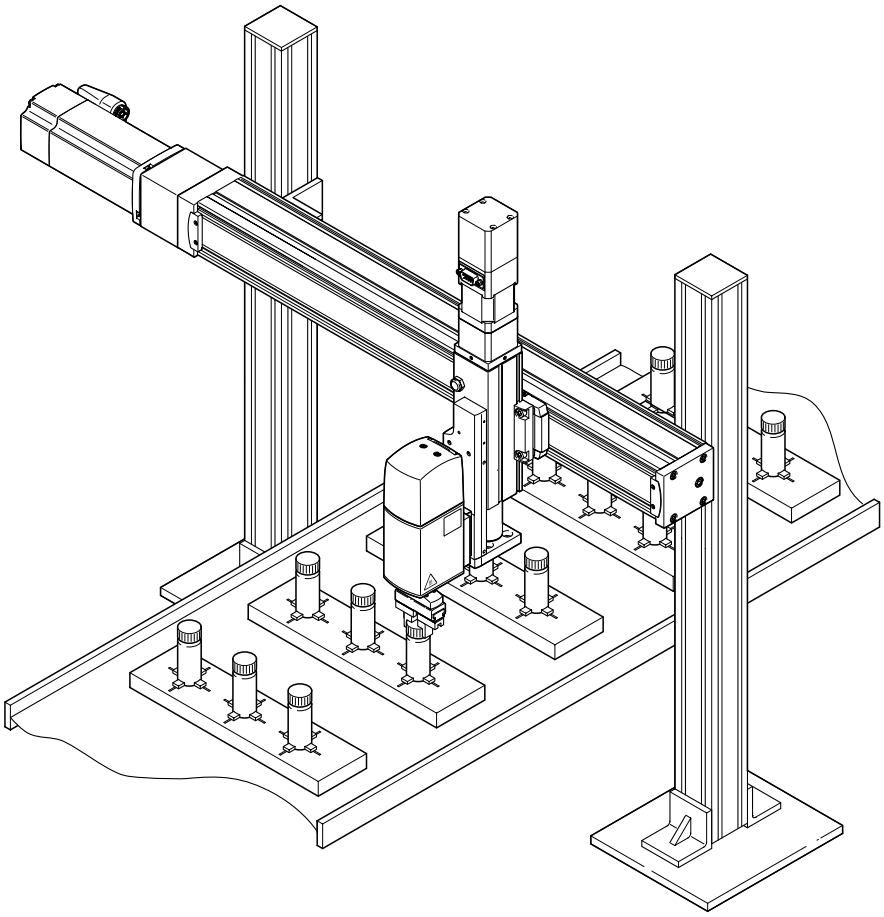

Screwing cover caps onto vials and removing them

- Mini slide EGSC-BS retracted
- Mounting EHAM-E20

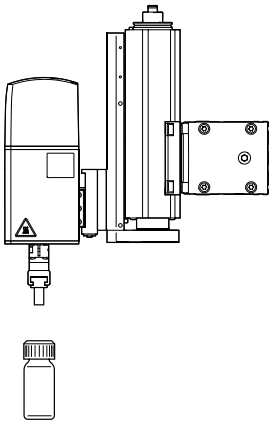

- Mini slide EGSC-BS extends
- Rotary gripper module EHMD grips the cap

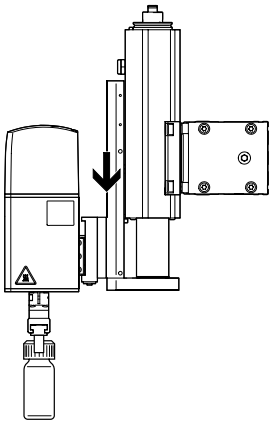

- Rotary gripper module EHMD turns and removes the cap from the vial
- The mounting EHAM-E20 takes on the Z-compensation without the need to move the mini slide (Z-axis)

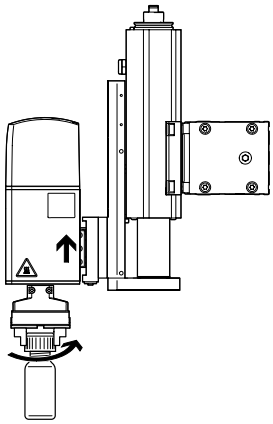

- Once the cap has been removed, the mini slide EGSC-BS retracts
- The Z-compensation moves back into the lower end position due to the weight

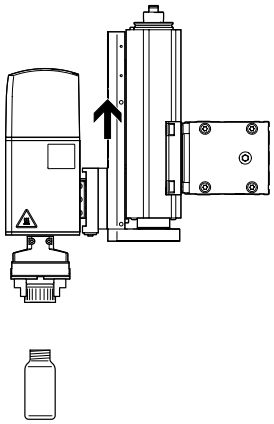

## Type codes

| 001 | Series | |
|---|---|---|
| **EHMD** | Rotary gripper module | |

| 002 | Size | |
|---|---|---|
| **40** | 40 | |

| 003 | Rotary module drive system | |
|---|---|---|
| **RE** | Electric | |

| 004 | Gripper drive system | |
|---|---|---|
| **GP** | Pneumatic | |
| **GE** | Electric | |

| 005 | Stroke per gripper jaw [mm] | |
|---|---|---|
| **16** | 16 | |

# Peripherals overview

## EHMD-40-RE-GE – Electric gripping

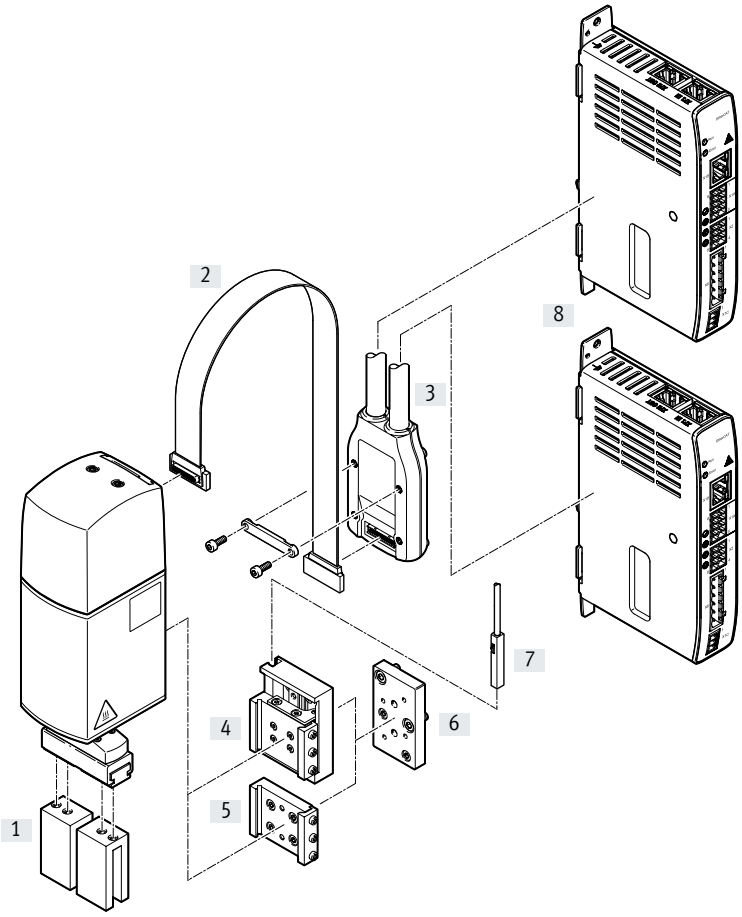


**Note**

The gripper is only intended as an external gripper (in the closing direction).

**Accessories**

| | Type/order code | Description | → Page/Internet |
|---|---|---|---|
| [1] | Gripper jaw blank<br>BUB-HGPT-16-B | • Blanks specially matched to the gripper jaws for manufacturing gripper fingers<br>• Not permitted for EHMD-40-RE-GE-16 | 23 |
| [2] | Motor cable<br>NEBM-F1W31 | • Connecting cable between EHMD and motor cable NEBM-SF1<br>• The cable is mandatory for compliance with the EMC Directive | 24 |
| [3] | Motor cable<br>NEBM-SF1 | Cable with adapter between motor cable NEBM-F1 and servo drive CMMT-ST | 24 |
| [4] | Mounting (with Z-compensation)<br>EHAM-E20-40-Z | • Mounting option via dovetail mounting.<br>• The mounting makes it possible to fit or remove cover caps on vials, for example, without additional Z-axis (Z-compensation = 12 mm). | 20 |
| [5] | Mounting (rigid)<br>EHAM-E20-40 | Mounting option via dovetail mounting | 21 |
| [6] | Adapter kit<br>EHAM-E20-40-E... | For attaching the mountings to the Z-axes:<br>• Mini slide EGSC-BS-25/32<br>• Mini slide EGSL-BS-35/45<br>• Electric slide EGSK-20/26 | 22 |
| [7] | Proximity sensor, T-slot<br>SIES-M8 | Inductive proximity sensor for sensing the Z-compensation position | 25 |
| [8] | Servo drive<br>CMMT-ST | For positioning the rotary or gripping motion | 24 |

# Peripherals overview

**EHMD-40-RE-GP – Pneumatic gripping**

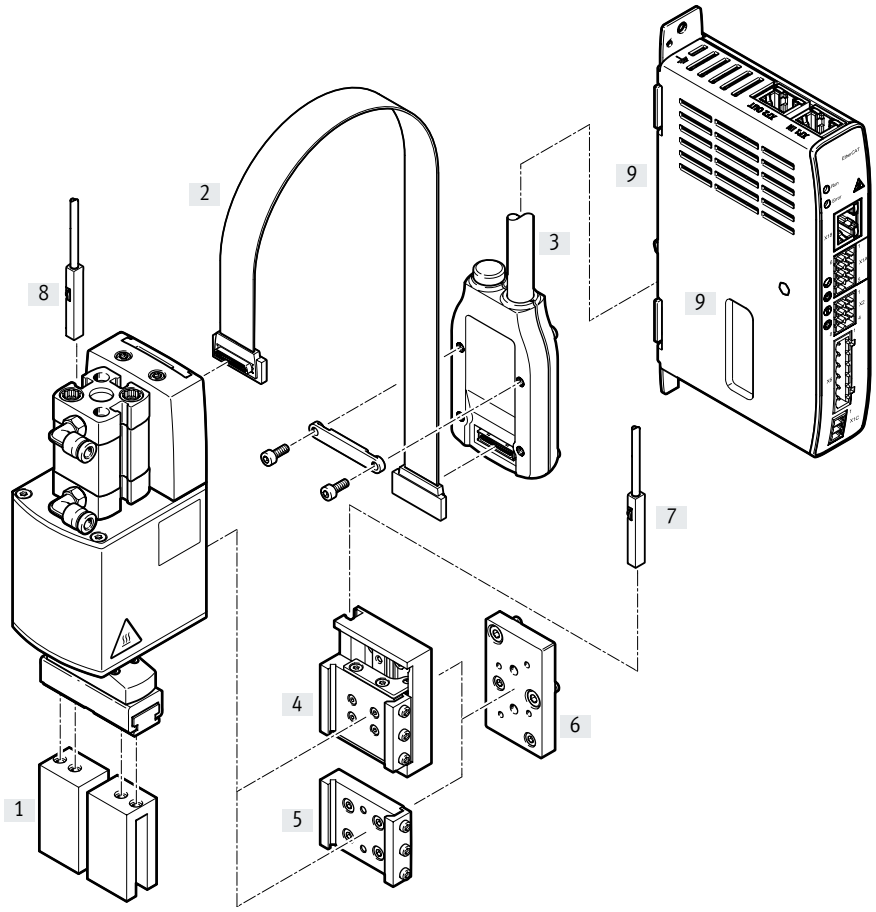


**Note**

The gripper is only intended as an external gripper (in the closing direction).

**Accessories**

| | Type/order code | Description | → Page/Internet |
|---|---|---|---|
| [1] | Gripper jaw blank<br>BUB-HGPT-16-B | Blanks specially matched to the gripper jaws for manufacturing gripper fingers | 23 |
| [2] | Motor cable<br>NEBM-F1W31 | • Connecting cable between EHMD and motor cable NEBM-SF1<br>• The cable is mandatory for compliance with the EMC Directive | 24 |
| [3] | Motor cable<br>NEBM-SF1 | Cable with adapter between motor cable NEBM-F1 and servo drive CMMT-ST | 24 |
| [4] | Mounting (with Z-compensation)<br>EHAM-E20-40-Z | • Mounting option via dovetail mounting.<br>• The mounting makes it possible to fit or remove cover caps on vials, for example, without additional Z-axis (Z-compensation = 12 mm). | 20 |
| [5] | Mounting (rigid)<br>EHAM-E20-40 | Mounting option via dovetail mounting | 21 |
| [6] | Adapter kit<br>EHAM-E20-40-E... | For attaching the mountings to the Z-axes:<br>• Mini slide EGSC-BS-25/32<br>• Mini slide EGSL-BS-35/45<br>• Electric slide EGSK-20/26 | 22 |
| [7] | Proximity sensor, T-slot<br>SIES-M8 | Inductive proximity sensor for sensing the Z-compensation position | 25 |
| [8] | Proximity sensor, T-slot<br>SME/SMT-M8 | Proximity sensor for sensing the position of the gripper fingers (open/closed) | 25 |
| [9] | Servo drive<br>CMMT-ST | For positioning the rotary or gripping motion | 24 |

# Data sheet

Output torque
0.3 Nm

Rotation angle
Infinite

Total stroke
32 mm

Actuation via:
- Servo drive CMMT-ST
- Controller for stepper motors with encoder input

| General technical data | | | | |
|---|---|---|---|---|
| Type | | EHMD-... | | |
| | | -GE | -GE-16 | -GP |
| Design | | Electric rotary drive | | Electric rotary drive |
| | | Electric gripper | | Pneumatic gripper |
| Motor type | | Stepper motor | | |
| Position sensing | | | | |
| Rotation | | Motor encoder | | |
| Gripping | | Motor encoder | | Slot for proximity sensor |
| Homing | | | | |
| Rotation | | Encoder index | | |
| Gripping | | Fixed-stop block | | – |
| Gripper function | | Parallel | | |
| Rotation angle | | Infinite | | |
| Number of gripper jaws | | 2 | | |
| Stroke per gripper jaw | [mm] | 0 ... 5 | 0 ... 15 | 5 |
| Rated load[1)] | [g] | 250 | | |
| Type of mounting | | Via dovetail slot | | |
| Mounting position | | Any | | |
| Product weight | [g] | 681 | 724 | 577 |

1) Rated load = gripper fingers + payload

| Technical data – Rotation | | | | |
|---|---|---|---|---|
| Type | | EHMD-... | | |
| | | -GE | -GE-16 | -GP |
| Design | | Electric rotary drive | | Electric rotary drive |
| Max. output torque | [Nm] | 0.3 | | |
| Max. output speed | [rpm] | 240 | | |
| Functional principle | | Stepper motor, direct drive | | |
| Nominal voltage | [V DC] | 24 | | |
| Nominal current | [A] | 0.9 | | |
| Holding torque at nominal current | [Nm] | 0.3 | | |
| Resistance per phase | [Ω] | 5.8 ±15% | | |
| Inductance per phase | [mH] | 11 ±20% | | |
| Step angle | [°] | 1.8 ±5% | | |
| Moment of inertia | [kgm²] | $1.25 \times 10^{-5}$ | $2.34 \times 10^{-5}$ | $1.25 \times 10^{-5}$ |
| Electrical connection | | Plug | | |
| | | Plug pattern F1 | | |
| **Encoder** | | | | |
| Operating voltage | [V DC] | 5 ±10% | | |
| Current consumption (without load) | [mA] | 60 | | |
| Pulses/revolution | [1/rev] | 500 | | |
| Rotor position encoder | | RS422 TTL AB-channel + zero index | | |
| | | Incremental | | |
| Rotor position encoder measuring principle | | Optical | | |

# Data sheet

| Technical data – Gripping | | | | |
|---|---|---|---|---|
| Type | | EHMD-... | | |
| | | -GE | -GE-16 | -GP |
| Design | | Electric gripper | | Pneumatic gripper |
| Gripping force per gripper jaw | [N] | 7 ... 35 | | 5 ... 35 |
| Max. gripping force | | | | |
| Closed-loop control mode | [N] | 35 | 14 | – |
| Open-loop control mode | [N] | 20 ... 25 | 6 ... 8 | – |
| Residual gripping force[1)] | [N] | > 10 | > 4 | – |
| Gripping force per gripper jaw at 6 bar, closing | [N] | – | | 25 |
| Minimum gripping force | [N] | 7 | | 5 |
| Pneumatic connection | | – | | QS-4 |
| Functional principle | | Stepper motor with lead screw | | – |
| Nominal voltage | [V DC] | 24 | | – |
| Nominal current | [A] | 0.5 | | – |
| Holding torque at nominal current | [Nm] | 0.043 | | – |
| Resistance per phase | [Ω] | 5.6 ±15% | | – |
| Inductance per phase | [mH] | 4.0 ±20% | | – |
| Step angle | [°] | 1.8 ±5% | | – |
| Moment of inertia | [kgm²] | $9x\ 10^{-7}$ | | – |
| Max. motor speed | [rpm] | 1000 | | – |
| Feed constant | [mm/rev] | 1.478 | 4.4 | – |
| Max. speed per gripper jaw | [mm/s] | 25 | 70 | – |
| Permissible speed for homing to stop | [mm/s] | 2 | 5 | – |
| Reversing backlash | [mm] | 0.3 | 0.8 | – |
| Electrical connection | | Plug | | – |
| | | Plug pattern F1 | | – |
| **Encoder** | | | | |
| Operating voltage | [V DC] | 5 ±10% | | – |
| Current consumption (without load) | [mA] | 30 | | – |
| Pulses/revolution | [1/rev] | 500 | | – |
| Rotor position encoder | | RS422 TTL AB-channel + zero index | | – |
| | | Incremental | | – |
| Rotor position encoder measuring principle | | Optical | | – |

**Note**

1) In the event of a power failure, a residual gripping force (gripping force back-up) is ensured by the mechanical design. However, the maximum gripping force cannot be maintained.

# Data sheet

| Operating and environmental conditions | | | | |
|---|---|---|---|---|
| Type | | EHMD-... | | |
| | | -GE | -GE-16 | -GP |
| Operating pressure | [bar] | – | | 1.5 ... 8 |
| Operating medium | | – | | Compressed air to ISO 8573-1:2010 [7:4:4] |
| Note on the operating/pilot medium | | – | | Operation with lubricated medium possible (in which case lubricated operation will always be required) |
| Ambient temperature | [°C] | 0 ... +40 | | |
| Storage temperature | [°C] | –20 ... +70 | | |
| Relative humidity | [%] | 0 ... 85 (non-condensing) | | |
| Degree of protection | | IP20 | | |
| Insulation class | | B | | |
| Duty cycle | [%] | 100 | | |
| Corrosion resistance class CRC[1)] | | 1 | | |
| CE marking (see declaration of conformity)[3)] | | To EU EMC Directive[2)]<br>(with shielded cables and a cable length of max. 30 m) | | |
| UKCA marking (see declaration of conformity) | | To UK instructions for EMC | | |
| KC mark | | KC EMC | | |
| Certification | | RCM compliance mark | | |
| Food-safe[3)] | | See supplementary material information | | |

1) Corrosion resistance class CRC 1 to Festo standard FN 940070
Low corrosion stress. Dry indoor application or transport and storage protection. Also applies to parts behind coverings, in the non-visible interior area, and parts which are covered in the application (e.g. drive trunnions).

2) For information about the area of use, see the EC declaration of conformity at: www.festo.com/sp → Certificates.
If the devices are subject to usage restrictions in residential, commercial or light-industrial environments, further measures for the reduction of the emitted interference may be necessary.

3) Additional information: www.festo.com/sp → Certificates.

| Materials | | | |
|---|---|---|---|
| Type | EHMD- | | |
| | -GE | -GE-16 | -GP |
| Cover | Reinforced PA | | PA |
| Housing | Anodised wrought aluminium alloy | | |
| Tie rod | Stainless steel | | |
| Gripper kinematics | Tempered steel | Stainless steel | Tempered steel |
| Note on materials | Contains paint-wetting impairment substances | | |
| | RoHS-compliant | | |

## Static characteristic load values at the gripper jaws

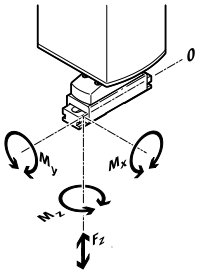


The indicated permissible forces and torques apply to a single gripper jaw. They include the lever arm, additional weight forces created by the workpiece or external gripper fingers and acceleration forces during movement. The zero coordinate line (gripper jaw guide) must be taken into consideration for the calculation of torques.

| Type | | EHMD-... | | |
|---|---|---|---|---|
| | | -GE | -GE-16 | -GP |
| Max. permissible force $F_x$ | [N] | 30 | | |
| Max. permissible force $F_z$ | [N] | 30 | | |
| Max. permissible torque $M_x$ | [Nm] | 0.7 | 1.5 | 0.7 |
| Max. permissible torque $M_y$ | [Nm] | 1.5 | 1.5 | 1.5 |
| Max. permissible torque $M_z$ | [Nm] | 0.7 | 1.5 | 0.7 |

# Data sheet

## Graphs for rotation

### Torque M as a function of rotational speed n

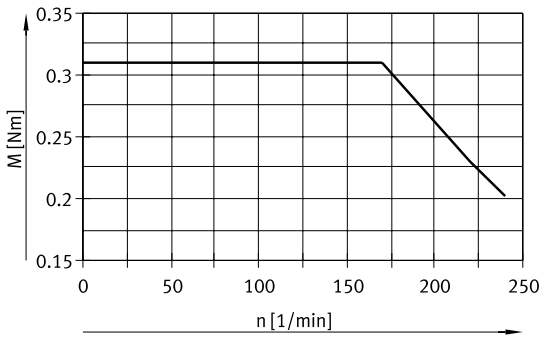


### Angular acceleration as a function of moment of inertia J

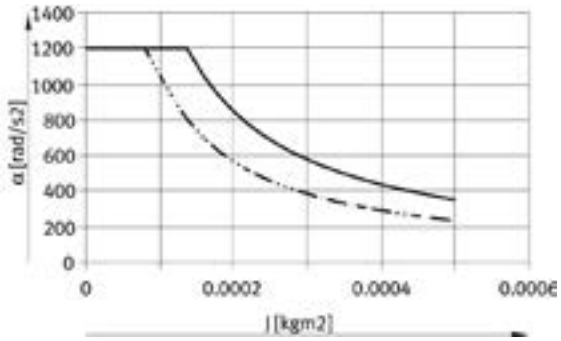


Closed-loop control
Open-loop control

## Graphs for gripping, pneumatic

### Gripping force F as a function of lever arm x and operating pressure d

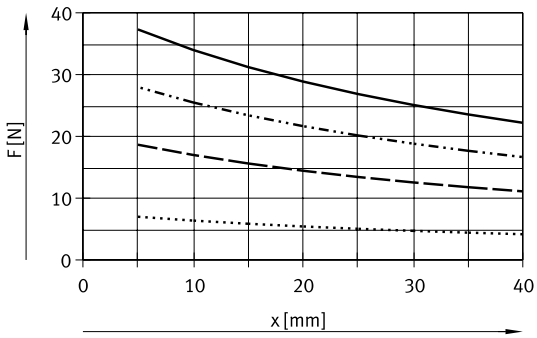


d = 8 bar
d = 6 bar
d = 4 bar
d = 1.5 bar

# Data sheet

## Graphs for electric gripping with CMMT-ST

### Gripping force F as a function of lever arm x and force specification

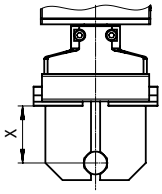


Even if the workpiece size is not known, it is possible to close the gripper with a defined gripping force by limiting the torque. With the CMMT-ST, the force mode can be used to close the gripper. The force setpoint is specified as a percentage value and corresponds to the motor current in relation to the nominal current.

EHMD-...-GE

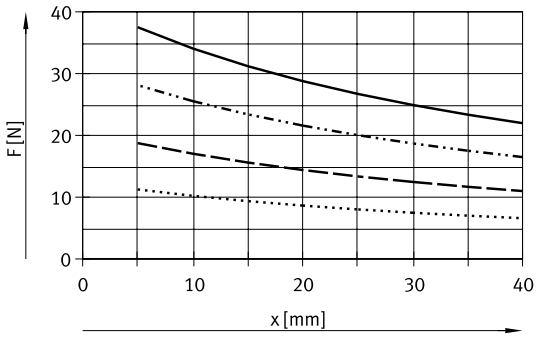


EHMD-...-GE-16

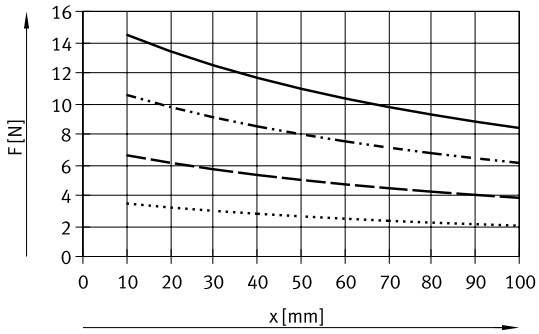


- 100%
- 75%
- 50%
- 30%

For EHMD-...-GE-16:
The characteristic curves show typical gripping forces in the new state. Depending on the function, these may fluctuate as a result of internal friction.

## Graphs for electric gripping with motor controller (without torque control)

### Gripping force F as a function of lever arm x and additional path

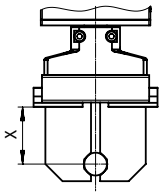


If the workpiece size is known, a defined gripping force can be achieved by the deflection of the gripper drive. Here, the gripper continues to be closed along a specific path once it is touching the workpiece. The gripper fingers then stay where they are while the drive continues to move and the spring is tensioned.

EHMD-...-GE

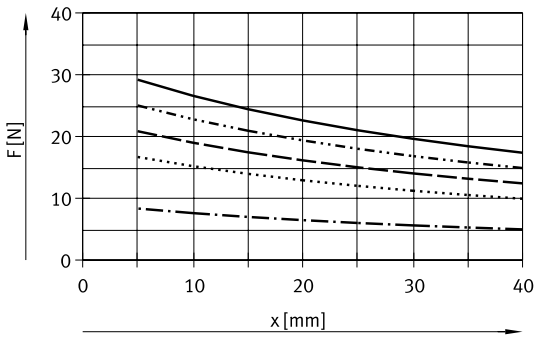


EHMD-...-GE-16

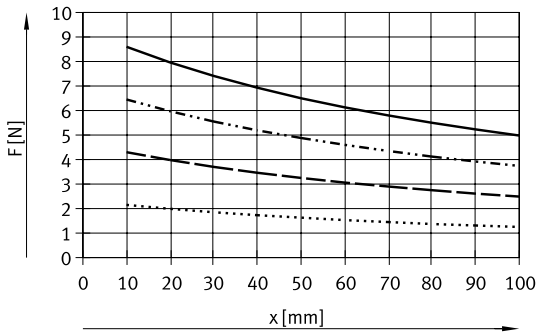


- 0.7 mm
- 0.6 mm
- 0.5 mm
- 0.4 mm
- 0.2 mm

- 2 mm
- 1.5 mm
- 1 mm
- 0.5 mm

# Data sheet

## Gripping force F as a function of velocity v

Requirement:

- Servo drive CMMT-ST in force mode
- Ambient temperature = 25°C

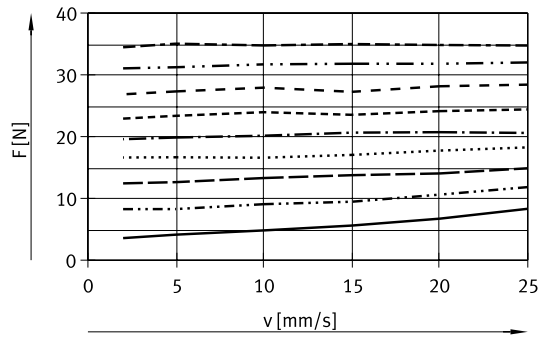


20%
30%
40%
50%
60%
70%
80%
90%
100%

# Data sheet

## Pin allocation

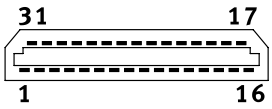


| PIN | Function<br>EHMD-...-GE | EHMD-...-GP |
|---|---|---|
| 1 | Encoder for rotation I | Encoder for rotation I |
| 2 | Encoder for rotation B | Encoder for rotation B |
| 3 | Encoder for rotation A | Encoder for rotation A |
| 4 | Encoder for gripper I | – |
| 5 | Encoder for gripper B | – |
| 6 | Encoder for gripper A | – |
| 7 | Shield | Shield |
| 8 | +5 V DC encoder for gripper | – |
| 9 | +5 V DC encoder for rotation | +5 V DC encoder for rotation |
| 10 | Shield | Shield |
| 11 | Motor for rotation phase B | Motor for rotation phase B |
| 12 | Motor for rotation phase B | Motor for rotation phase B |
| 13 | Motor for rotation phase A | Motor for rotation phase A |
| 14 | Motor for rotation phase A | Motor for rotation phase A |
| 15 | Motor for gripper phase B | – |
| 16 | Motor for gripper phase A | – |
| 17 | Motor for gripper phase A/ | – |
| 18 | Motor for gripper phase B/ | – |
| 19 | Motor for rotation phase A/ | Motor for rotation phase A/ |
| 20 | Motor for rotation phase A/ | Motor for rotation phase A/ |
| 21 | Motor for rotation phase B/ | Motor for rotation phase B/ |
| 22 | Motor for rotation phase B/ | Motor for rotation phase B/ |
| 23 | Shield | Shield |
| 24 | GND encoder | GND encoder |
| 25 | Shield | Shield |
| 26 | Encoder for gripper A/ | – |
| 27 | Encoder for gripper B/ | – |
| 28 | Encoder for gripper I/ | – |
| 29 | Encoder for rotation A/ | Encoder for rotation A/ |
| 30 | Encoder for rotation B/ | Encoder for rotation B/ |
| 31 | Encoder for rotation I/ | Encoder for rotation I/ |

# Data sheet

**Dimensions** Download CAD data ➔ www.festo.com

EHMD-...-GE

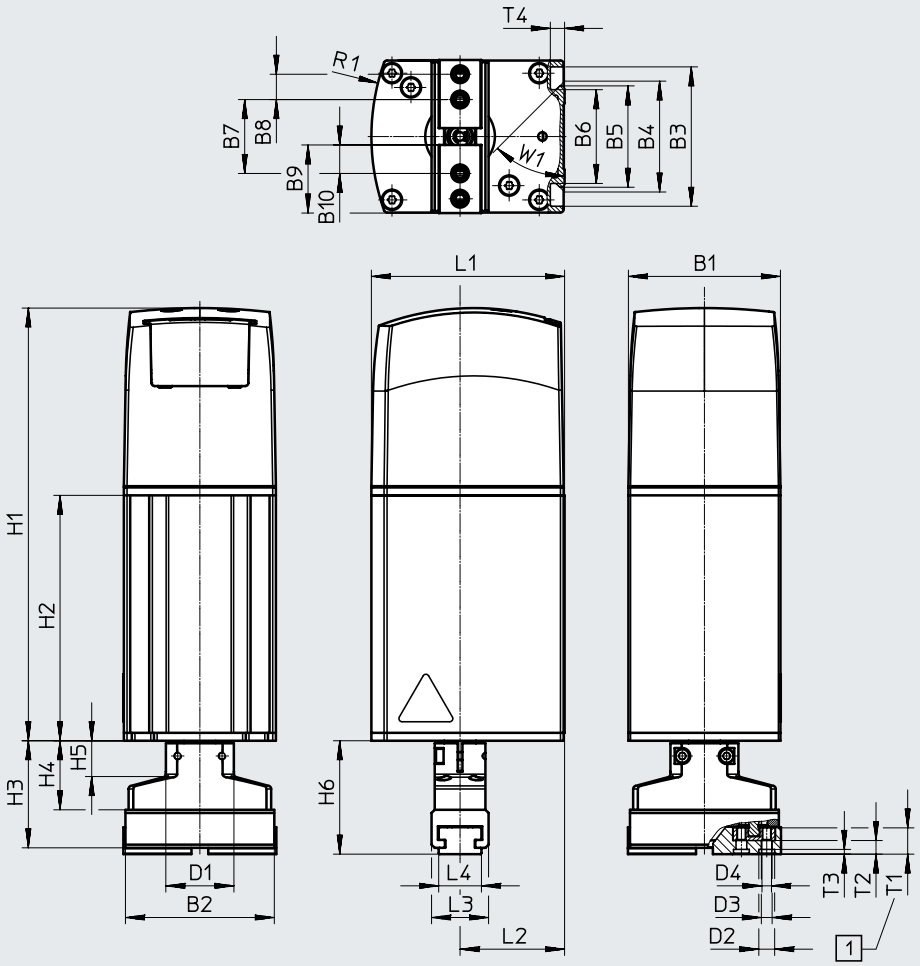


[1] Max. screw-in depth
Included in the scope of delivery:
4x screws M3x12
4x centring sleeves ZBH-5
(for gripper fingers)

| Type | B1 | B2 | B3 | B4 | B5 | B6 | B7 | | B8 | B9 |
|---|---|---|---|---|---|---|---|---|---|---|
| | | | | ±0.15 | | | min. | max. | ±0.08 | |
| EHMD-...-GE | 48 | 47 | 44 | 35 | 32 | 29.6 | 18 | 28 | 8 | 21.5 |

| Type | B10 | D1 ø | D2 ø H9 | D3 ø | D4 | H1 | H2 | H3 | H4 | H5 | H6 |
|---|---|---|---|---|---|---|---|---|---|---|---|
| EHMD-...-GE | 9 | 21.5 | 5 | 3.4 | M3 | 136.6 | 77.5 | 33.8 | 21.8 | 11.3 | 35.8 |

| Type | L1 | L2 | L3 | L4 | R1 | T1 | T2 | T3 | T4 | W1 |
|---|---|---|---|---|---|---|---|---|---|---|
| EHMD-...-GE | 61 | 33 | 18 | 13.5 | 70 | 8.3 | 4.3 | 1.5 | 4.5 | 45° |

# Data sheet

**Dimensions** Download CAD data ➔ www.festo.com

EHMD-...-GE-16

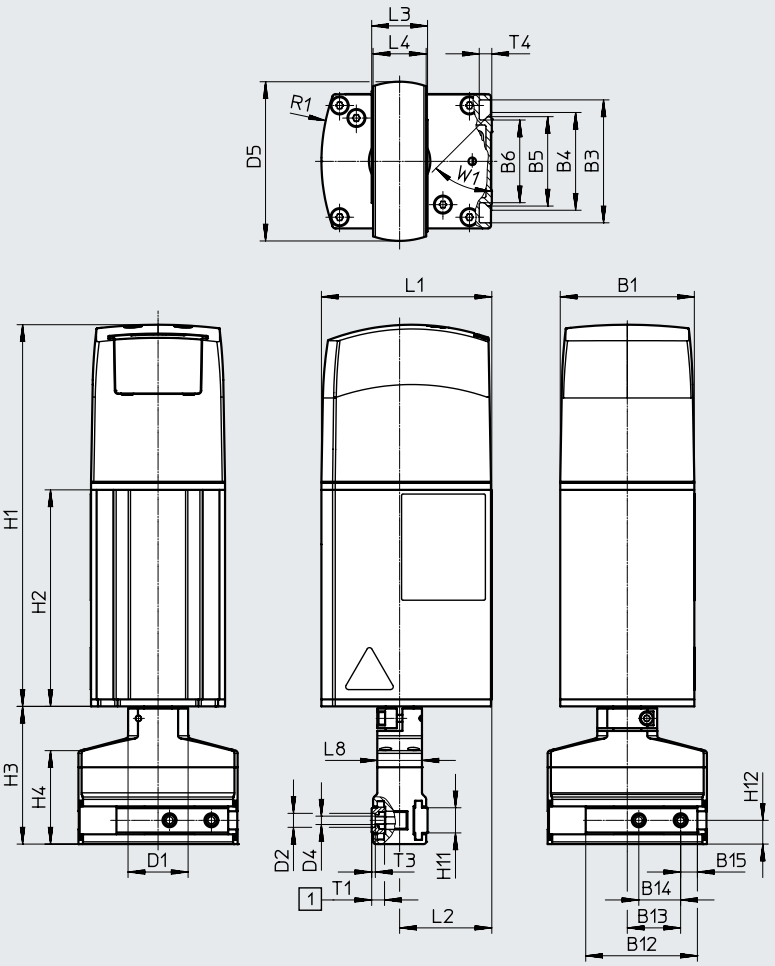


[1] Max. screw-in depth

| Type | B1 | B3 | B4 | B5 | B6 | B12 | B13 | | B14 | B15 |
|---|---|---|---|---|---|---|---|---|---|---|
| | | | ±0.15 | | | | min. | max. | | |
| EHMD-...-GE-16 | 48 | 44 | 35 | 32 | 29.6 | 40 | 6 | 22 | 15 | 6 |

| Type | D1<br>ø | D2<br>ø<br>H8 | D4 | D5<br>ø | H1 | H2 | H3 | H4 | H11 | H12 |
|---|---|---|---|---|---|---|---|---|---|---|
| EHMD-...-GE-16 | 21.5 | 5 | M3 | 57 | 136.6 | 77.5 | 49.3 | 33.2 | 9 | 8.5 |

| Type | L1 | L2 | L3 | L4 | L8 | R1 | T1 | T3 | T4 | W1 |
|---|---|---|---|---|---|---|---|---|---|---|
| EHMD-...-GE-16 | 61 | 33 | 20 | 19 | 16 | 70 | 4.6 | 1.3 | 4.5 | 45° |

# Data sheet

**Dimensions** Download CAD data ➔ www.festo.com

EHMD-...-GE-16 with bracket for gripper jaw mounting

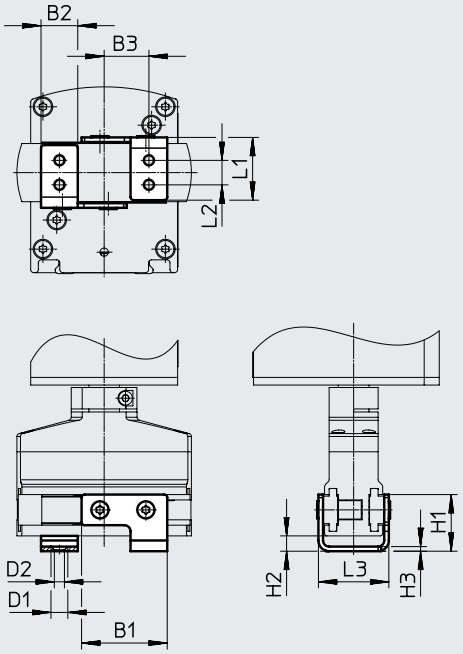


**Note**

Included in the scope of delivery of the gripper:

- 2x brackets
- 8x countersunk screws M3x6
- 4x centring sleeves ZBH-5

| Type | B1 | B2 | B3 | | D1 ⌀ | D2 ⌀ | H1 |
|---|---|---|---|---|---|---|---|
| | | | min. | max. | | | |
| EHMD-...-GE-16 | 28 | 12 | 7 | 23 | 5.5 | 3.3 | 18.5 |

| Type | H2 | H3 | L1 | L2 | L3 | L4 |
|---|---|---|---|---|---|---|
| EHMD-...-GE-16 | 5 | 1.5 | 20.5 | 8 | 23 | 19 |

# Data sheet

**Dimensions** Download CAD data ➔ www.festo.com

EHMD-...-GP

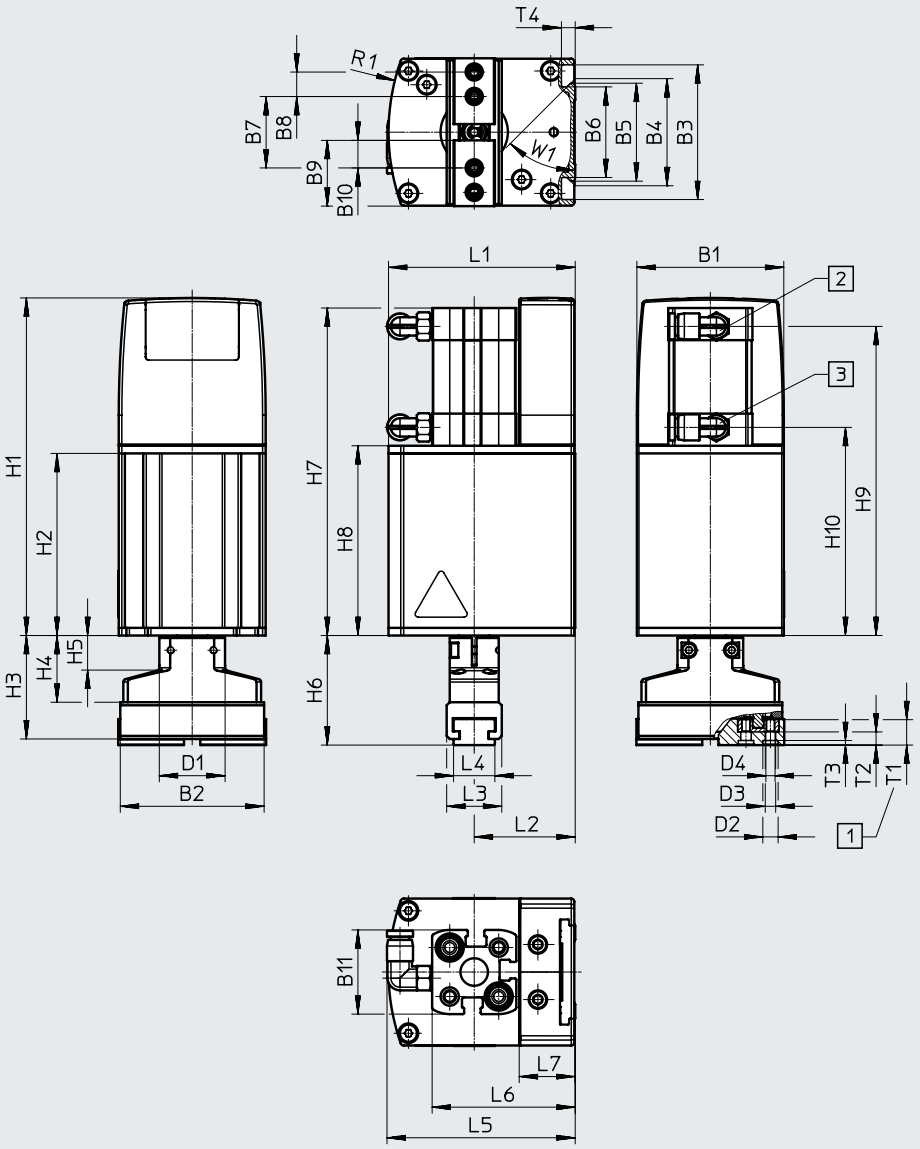


[1] Max. screw-in depth
Included in the scope of delivery:
4x screws M3x12
4x centring sleeves ZBH-5
(for gripper fingers)
Push-in fitting for
[2] Opening the gripper
[3] Closing the gripper

| Type | B1 | B2 | B3 | B4 | B5 | B6 | B7 | | B8 | B9 | B10 | B11 | D1 |
|---|---|---|---|---|---|---|---|---|---|---|---|---|---|
| | | | | ±0.15 | | | min. | max. | ±0.08 | | | | ⌀ |
| EHMD-...-GP | 48 | 47 | 44 | 35 | 32 | 29.6 | 18 | 28 | 8 | 21.5 | 9 | 27.5 | 21.5 |

| Type | D2 ⌀ H9 | D3 ⌀ | D4 | H1 | H2 | H3 | H4 | H5 | H6 | H7 | H8 | H9 | H10 |
|---|---|---|---|---|---|---|---|---|---|---|---|---|---|
| EHMD-...-GP | 5 | 3.4 | M3 | 110.3 | 59.5 | 33.8 | 21.8 | 11.3 | 35.8 | 107 | 62 | 101 | 68 |

| Type | L1 | L2 | L3 | L4 | L5 | L6 | L7 | R1 | T1 | T2 | T3 | T4 | W1 |
|---|---|---|---|---|---|---|---|---|---|---|---|---|---|
| EHMD-...-GP | 61 | 33 | 18 | 13.5 | 61.5 | 46.8 | 18.3 | 70 | 8.3 | 4.3 | 1.5 | 4.5 | 45° |

# Data sheet

**Ordering data**

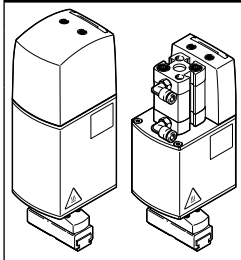

| Drive type | | Max. stroke per gripper jaw | Part no. | Type |
|---|---|---|---|---|
| Rotation | Gripping | | | |
| Electric | Electric | 5 | **4788875** | **EHMD-40-RE-GE** |
| | | 15 | **8099502** | **EHMD-40-RE-GE-16** |
| Electric | Pneumatic | 5 | **4790698** | **EHMD-40-RE-GP** |

# Accessories

**Mounting EHAM-E20-40-Z**
Mounting position: vertical
Material:
Wrought aluminium alloy

RoHS-compliant
Contains paint-wetting impairment substances

Mounting option via dovetail mounting.
The mounting compensates for the thread pitch when turning (fitting/removing) cover caps on vials without needing additional movement of the Z-axis.
(Z-compensation = 12 mm)

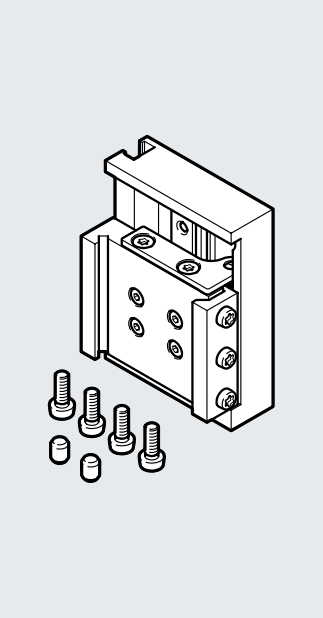

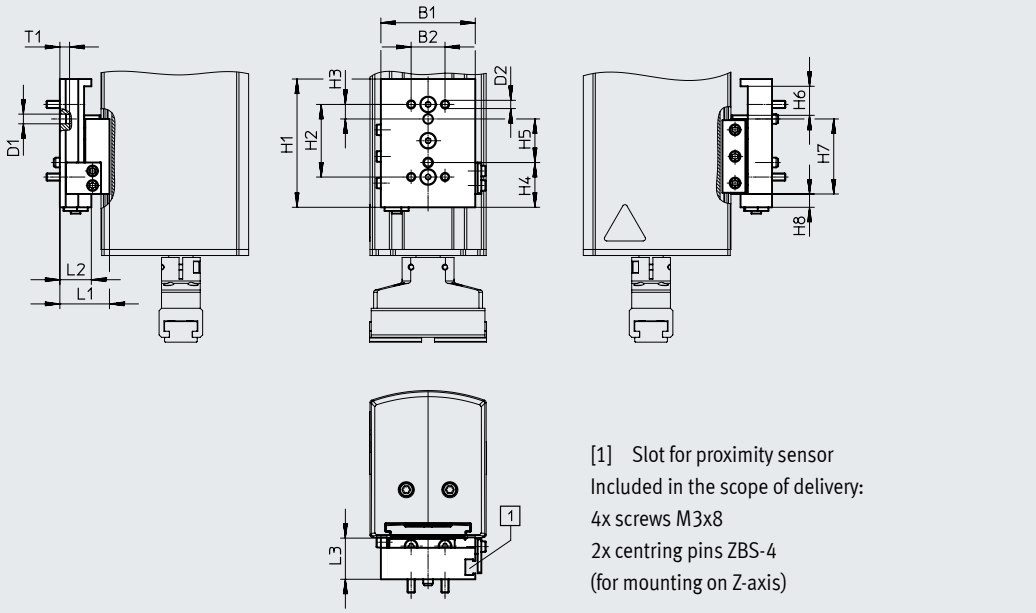


[1] Slot for proximity sensor
Included in the scope of delivery:
4x screws M3x8
2x centring pins ZBS-4
(for mounting on Z-axis)

**Dimensions and ordering data**

| For size | B1 | B2 | D1 ⌀ H8 | D3 ⌀ | H1 | H2 | H3 | H4 | H5 ±0.05 | H6 |
|---|---|---|---|---|---|---|---|---|---|---|
| 40 | 39 | 14 | 4 | 3.4 | 53 | 30 | 6 | 18.5 | 18 | 12 |

| For size | H7 | H8 | L1 | L2 | L3 | T1 | Weight [g] | Part no. | Type |
|---|---|---|---|---|---|---|---|---|---|
| 40 | 31 | 5.5 | 20.5 | 13 | 17 | 2.5 | 82 | **5293408** | **EHAM-E20-40-Z** |

# Accessories

**Mounting EHAM-E20-40**
Mounting position: Any
Material:
Wrought aluminium alloy

RoHS-compliant
Contains paint-wetting impairment substances

Rigid mounting option via dovetail mounting.

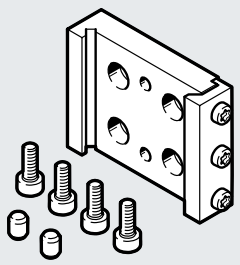

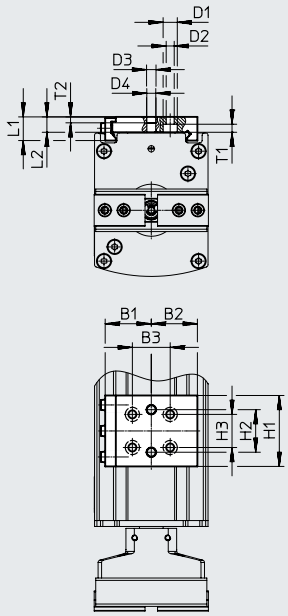


Included in the scope of delivery:
4x screws M3x8
2x centring pins ZBS-4
(for mounting on Z-axis)

**Dimensions and ordering data**

| For size | B1 | B2 | B3 | D1 ⌀ | D2 ⌀ | D3 ⌀ H8 | D4 ⌀ | H1 |
|---|---|---|---|---|---|---|---|---|
| 40 | 19.5 | 19.5 | 16 | 6 | 3.4 | 4 | 3.8 | 30 |

| For size | H2 ±0.05 | H3 | L1 | L2 | T1 | T2 | Weight [g] | Part no. | Type |
|---|---|---|---|---|---|---|---|---|---|
| 40 | 18 | 14 | 10 | 6.5 | 3.4 | 2.5 | 26 | **4991965** | **EHAM-E20-40** |

# Accessories

**Mounting EHAM-E20-40-E ...**
Mounting position: Any
Material:
Wrought aluminium alloy

RoHS-compliant
Contains paint-wetting impairment substances

For attaching the mountings to the Z-axes:
- Mini slide EGSC-BS-25/32
- Mini slide EGSL-BS-35/45
- Electric slide EGSK-20/26

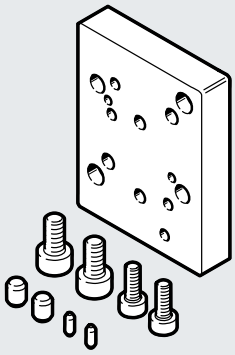

With Z-compensation
EAHM-E20-40-Z

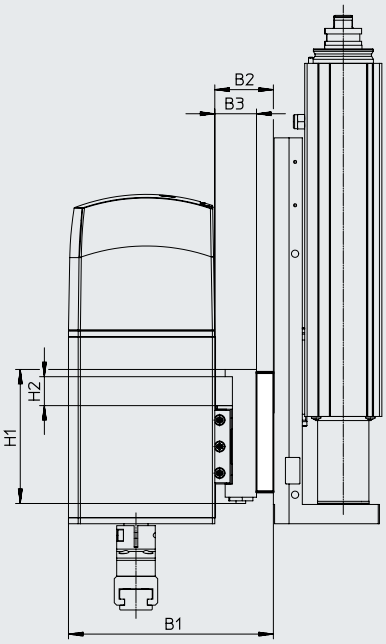


With rigid mountings
EAHM-E20-40

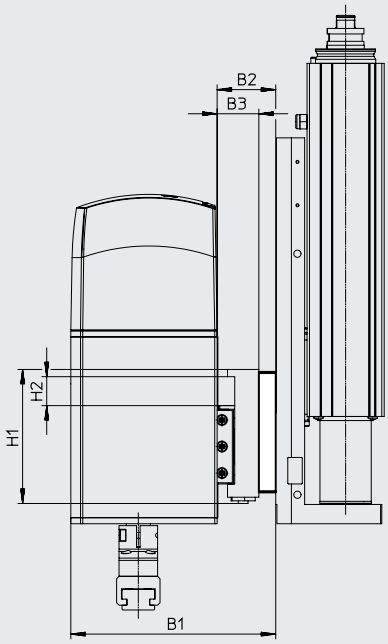


Matching screws and centring pins/sleeves included in the scope of delivery.

**Dimensions and ordering data**

| For Z-axis | B1 | B2 | B3 | H1 | H2[1] | Weight [g] | Part no. | Type |
|---|---|---|---|---|---|---|---|---|
| **And flexible mounting EHAM-E20-40-Z** | | | | | | | | |
| EGSC-BS-25/32 | 85 | 24.3 | 17.3 | 55.6 | 12 | 30 | **8080760** | **EHAM-E20-40-E19-25** |
| EGSL-BS-35/45 | | | | | | 24 | **8081015** | **EHAM-E20-40-E8-35** |
| EGSK-20/26 | | | | | | 36 | **8081016** | **EHAM-E20-40-E9-20** |
| **And rigid mounting EHAM-E20-40** | | | | | | | | |
| EGSC-BS-25/32 | 74.5 | 13.8 | 6.8 | 30 | – | 30 | **8080760** | **EHAM-E20-40-E19-25** |
| EGSL-BS-35/45 | | | | | | 24 | **8081015** | **EHAM-E20-40-E8-35** |
| EGSK-20/26 | | | | | | 36 | **8081016** | **EHAM-E20-40-E9-20** |

1) Automatic Z-stroke compensation.

# Accessories

**Gripper jaw blank BUB-HGPT**
(2 included in the scope of delivery)
Not included in the scope of delivery of the rotary gripper module.

Material:
Aluminium

Not permitted for
EHMD-40-RE-GE-16

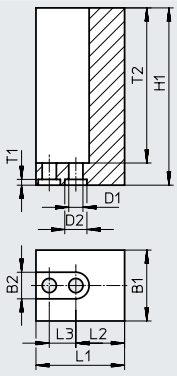


**Note**
Use the matching screws and centring sleeves included with the rotary gripper module EHMD to mount it.

**Dimensions and ordering data**

| For size | B1 ±0.05 | B2 H13 | D1 ⌀ H13 | D2 ⌀ H8 | D3 ⌀ H13 | H1 ±0.05 | L1 ±0.05 |
|---|---|---|---|---|---|---|---|
| 40 | 16 | 6 | 3.2 | 5 | – | 40 | 21 |

| For size | L2[1] | L3[1] | T1 +0.1 | T2 | Weight per blank [g] | Part no. | Type |
|---|---|---|---|---|---|---|---|
| 40 | 10 | 8 | 1.3 | 35 | 29 | **560244** | **BUB-HGPT-16-B** |

1) Tolerance for centring hole ±0.02 mm
Tolerance for through-hole ±0.1 mm

# Accessories

**Ordering data – Servo drive**

| | Description | Number of phases | Nominal current | Part no. | Type |
|---|---|---|---|---|---|
|  | The assortment of plugs NEKM is included in the delivery of the servo drive | **Bus protocol: EtherCAT** | | | |
| | | Single-phase | 8 | **8084005** | **CMMT-ST-C8-1C-EC-SO** |
| | | **Bus protocol: PROFINET RT/IRT** | | | |
| | | Single-phase | 8 | **8084004** | **CMMT-ST-C8-1C-PN-SO** |
| | | **Bus protocol: EtherNet/IP** | | | |
| | | Single-phase | 8 | **8084006** | **CMMT-ST-C8-1C-EP-SO** |

**Ordering data – Cables**

| | Description | Cable length [m] | Part no. | Type |
|---|---|---|---|---|
| **Motor cable** | | | | |
| 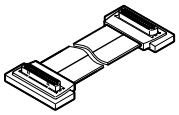 | • Connecting cable between EHMD and motor cable NEBM-SF1<br>• For EHMD-...-GE and EHMD-...-GP | 0.2 | **8113317** | **NEBM-F1W31-XC-0.2-F1N-DF1W31** |
| | | 0.5 | **8079819** | **NEBM-F1W31-XC-0.5-F1N-DF1W31** |
| **Motor cable** | | | | |
| 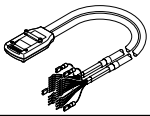 | • Cable with adapter between motor cable NEBM-F1 and CMMT-ST<br>• For EHMD-...-GE | 2.6 | **5213342** | **NEBM-SF1W31-EH-2.6-Q15N-LE28** |
| | | 5 | **8113307** | **NEBM-SF1W31-EH-5-Q15N-LE28** |
| | | 10 | **8113309** | **NEBM-SF1W31-EH-10-Q15N-LE28** |
| 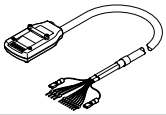 | • Cable with adapter between motor cable NEBM-F1 and CMMT-ST<br>• For EHMD-...-GP | 2.6 | **5213343** | **NEBM-SF1W31-EH-2.6-Q15N-LE14** |
| | | 5 | **8113308** | **NEBM-SF1W31-EH-5-Q15N-LE14** |
| | | 10 | **8113310** | **NEBM-SF1W31-EH-10-Q15N-LE14** |

# Accessories

**Ordering data – Proximity sensor for T-slot, inductive**

Data sheets → Internet: sies

| | Type of mounting | Switching output | Electrical connection | Cable length [m] | Part no. | Type |
|---|---|---|---|---|---|---|
| **N/O contact** | | | | | | |
| 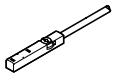 | Inserted in the slot from above, flush with the cylinder profile | PNP | Cable, 3-wire | 7.5 | **551386** | **SIES-8M-PS-24V-K-7.5-OE** |
| | | | Plug M8x1, 3-pin | 0.3 | **551387** | **SIES-8M-PS-24V-K-0.3-M8D** |
| | | NPN | Cable, 3-wire | 7.5 | **551396** | **SIES-8M-NS-24V-K-7.5-OE** |
| | | | Plug M8x1, 3-pin | 0.3 | **551397** | **SIES-8M-NS-24V-K-0.3-M8D** |
| **N/C contact** | | | | | | |
| 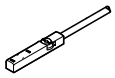 | Inserted in the slot from above, flush with the cylinder profile | PNP | Cable, 3-wire | 7.5 | **551391** | **SIES-8M-PO-24V-K-7.5-OE** |
| | | | Plug M8x1, 3-pin | 0.3 | **551392** | **SIES-8M-PO-24V-K-0.3-M8D** |
| | | NPN | Cable, 3-wire | 7.5 | **551401** | **SIES-8M-NO-24V-K-7.5-OE** |
| | | | Plug M8x1, 3-pin | 0.3 | **551402** | **SIES-8M-NO-24V-K-0.3-M8D** |

**Ordering data – Proximity sensor for T-slot, magneto-resistive**

Data sheets → Internet: smt

| | Type of mounting | Switching output | Electrical connection | Cable length [m] | Part no. | Type |
|---|---|---|---|---|---|---|
| **N/O contact** | | | | | | |
| 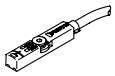 | Inserted in the slot from above, flush with the cylinder profile, short design | PNP | Cable, 3-wire | 2.5 | **574335** | **SMT-8M-A-PS-24V-E-2.5-OE** |
| | | | Plug M8x1, 3-pin | 0.3 | **574334** | **SMT-8M-A-PS-24V-E-0.3-M8D** |
| | | | Plug M12x1, 3-pin | 0.3 | **574337** | **SMT-8M-A-PS-24V-E-0.3-M12** |
| | | NPN | Cable, 3-wire | 2.5 | **574338** | **SMT-8M-A-NS-24V-E-2.5-OE** |
| | | | Plug M8x1, 3-pin | 0.3 | **574339** | **SMT-8M-A-NS-24V-E-0.3-M8** |

**Ordering data – Proximity sensor for T-slot, magnetic reed**

Data sheets → Internet: sme

| | Type of mounting | Switching output | Electrical connection | Cable length [m] | Part no. | Type |
|---|---|---|---|---|---|---|
| **N/O contact** | | | | | | |
| 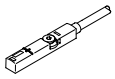 | Inserted in the slot from above, flush with the cylinder profile | Contacting | Cable, 3-wire | 2.5 | **543862** | **SME-8M-DS-24V-K-2.5-OE** |
| | | | | 5.0 | **543863** | **SME-8M-DS-24V-K-5.0-OE** |
| | | | Cable, 2-wire | 2.5 | **543872** | **SME-8M-ZS-24V-K-2.5-OE** |
| | | | Plug M8x1, 3-pin | 0.3 | **543861** | **SME-8M-DS-24V-K-0.3-M8D** |

**Ordering data – Connecting cables**

Data sheets → Internet: nebu

| | Electrical connection, left | Electrical connection, right | Cable length [m] | Part no. | Type |
|---|---|---|---|---|---|
|  | Straight socket, M8x1, 3-pin | Cable, open end, 3-wire | 2.5 | **541333** | **NEBU-M8G3-K-2.5-LE3** |
| | | | 5 | **541334** | **NEBU-M8G3-K-5-LE3** |
|  | Angled socket, M8x1, 3-pin | Cable, open end, 3-wire | 2.5 | **541338** | **NEBU-M8W3-K-2.5-LE3** |
| | | | 5 | **541341** | **NEBU-M8W3-K-5-LE3** |

**Ordering data – Centring sleeve**

| | Description | Part no. | Type | PU[1] |
|---|---|---|---|---|
|  | For mountings EHAM and gripper jaw blank BUB | **562959** | **ZBS-4** | 10 |
| | | **8146543** | **ZBH-5-B** | |

1) Packaging unit